Atlas™

Double Traffic Guardrail+

www.asafe.com

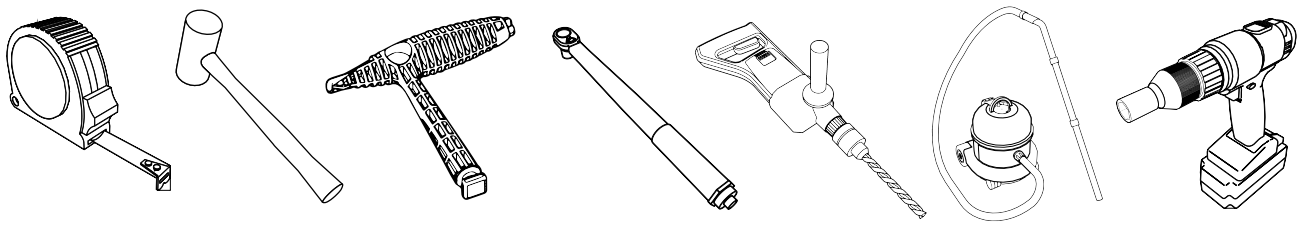

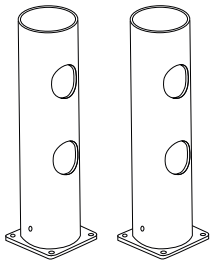

2X

2X

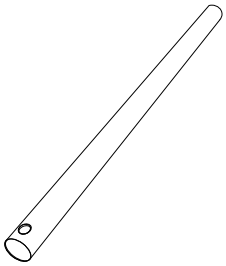

1X

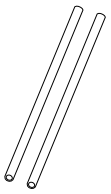

2X

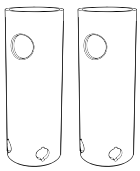

4X

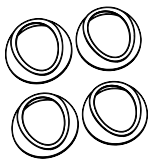

6X

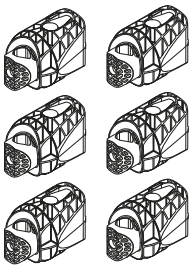

12X

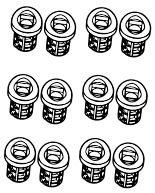

12X

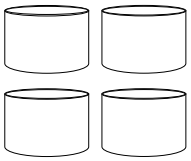

4X

2X

2X

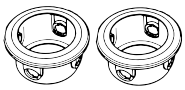

2X

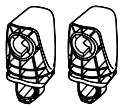

2X

8X

8X

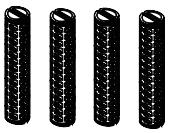

4X

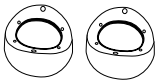

2X

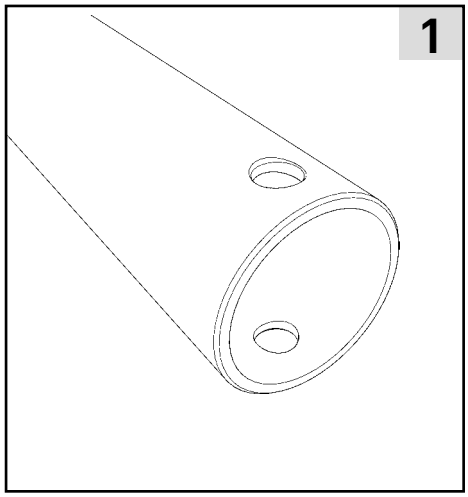
1

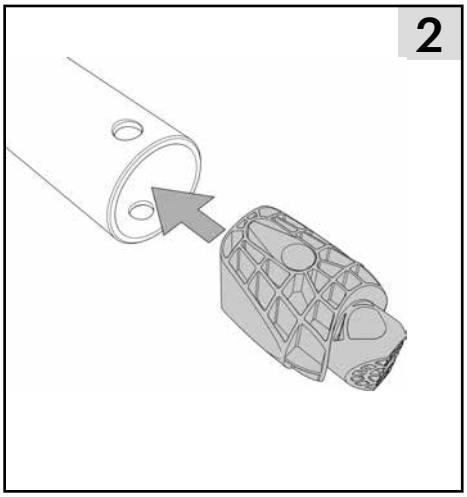
2

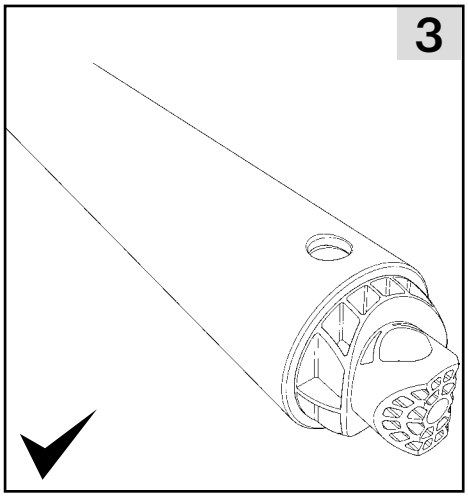
3

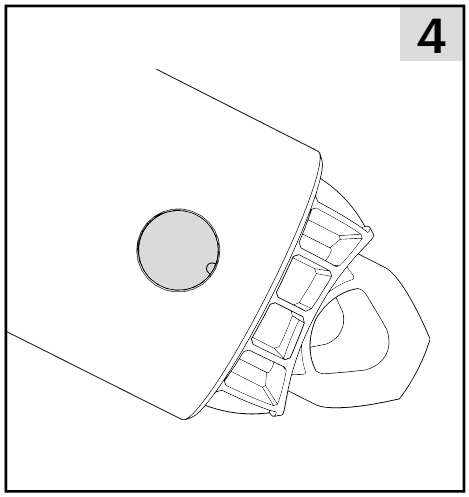
4

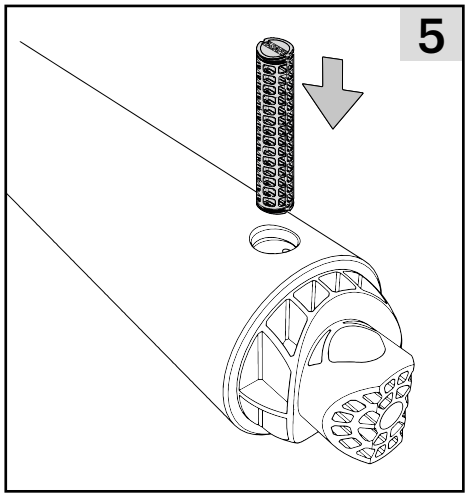
5

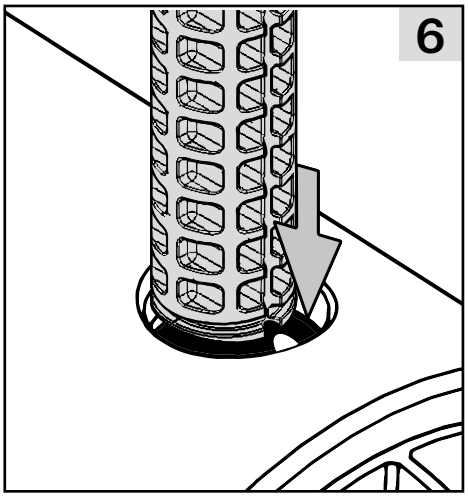
6

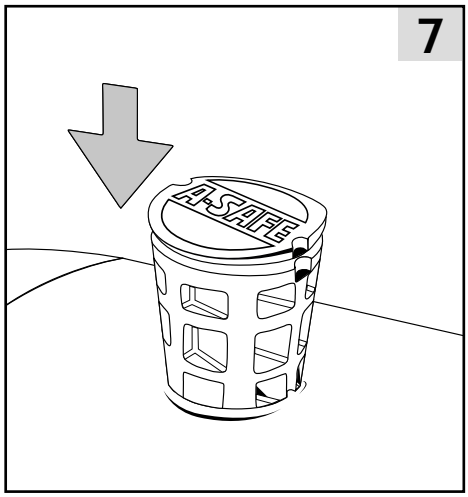
7
A-SAFE

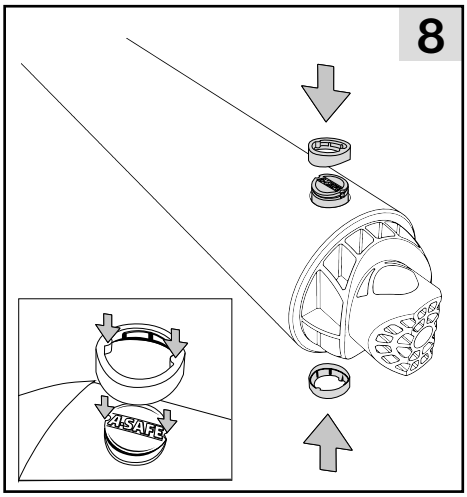
8
A-SAFE

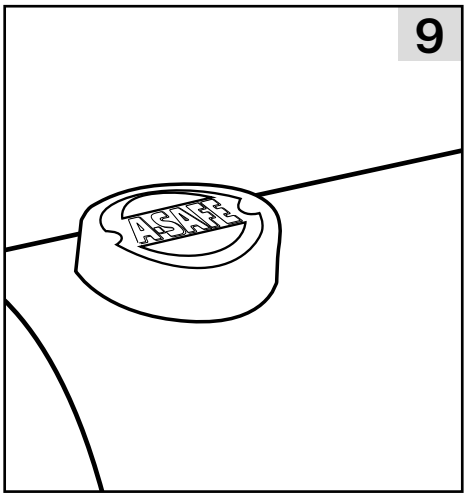
9
A-SAFE

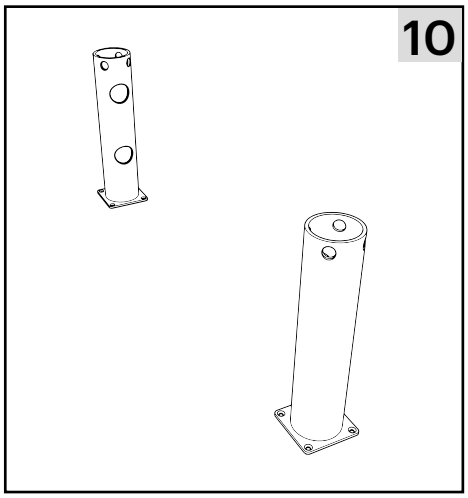
10

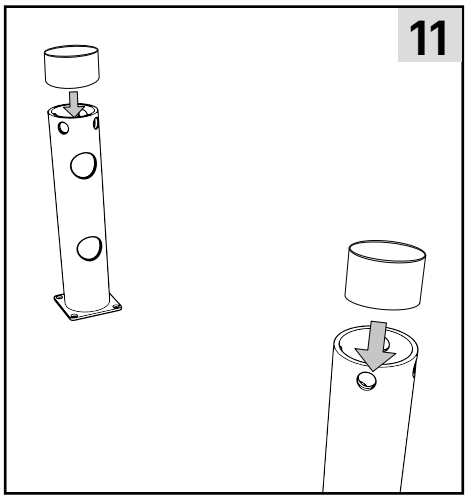
11

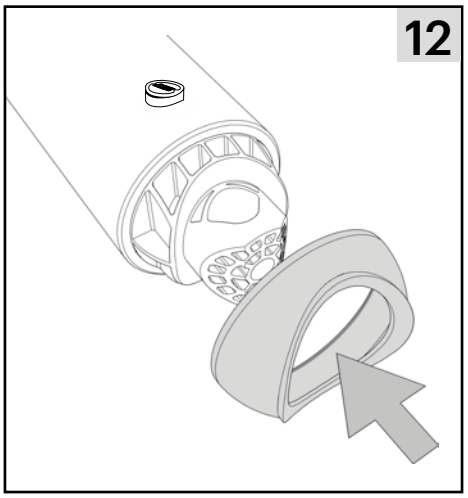
12

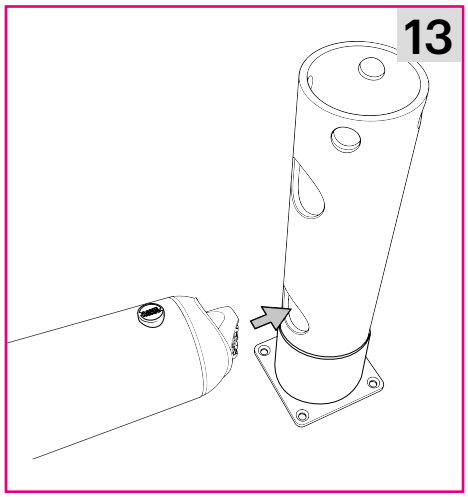
13

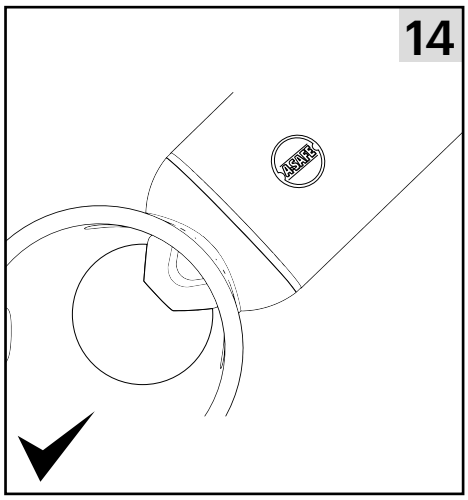
14
ASNEF

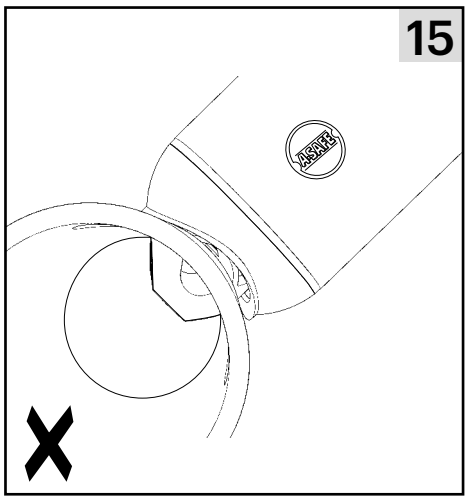
15
ASNEF

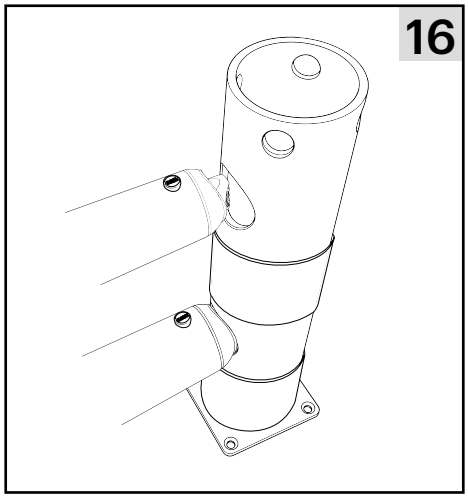
16

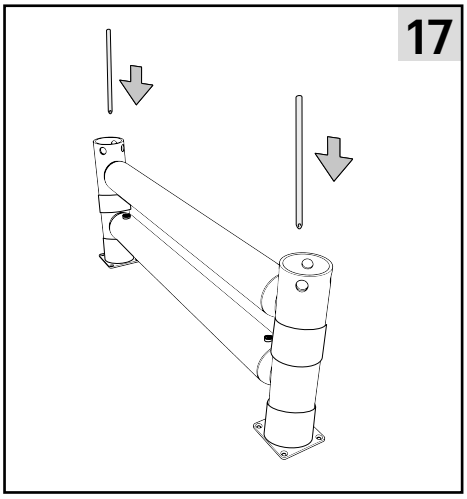
17

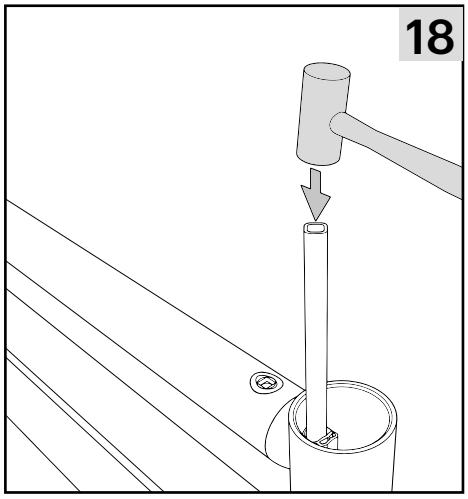
18

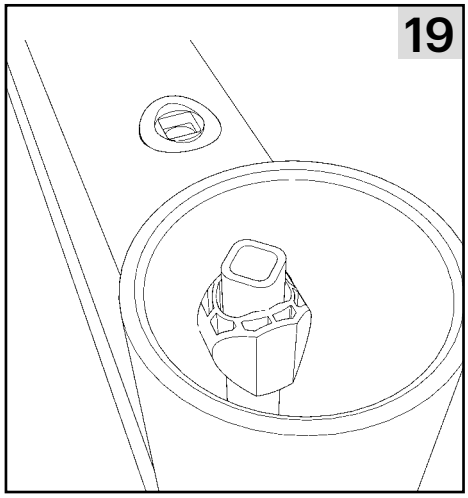
19

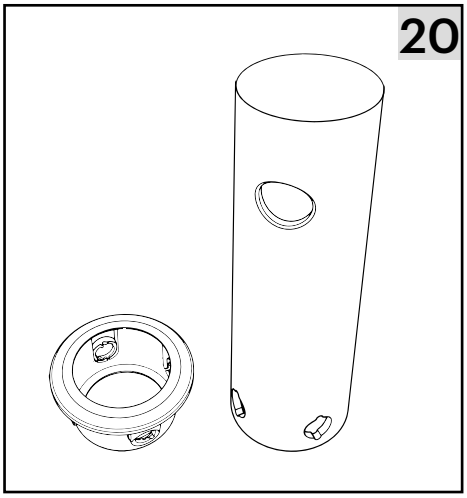
20

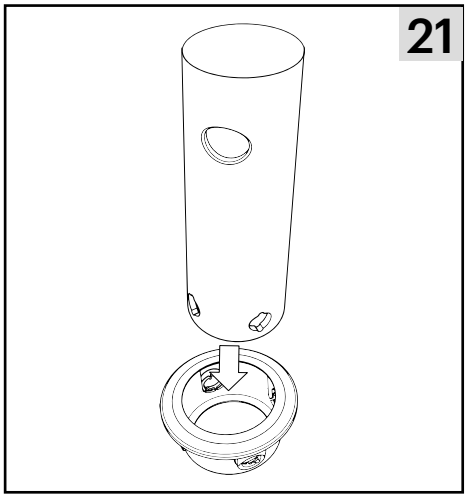
21

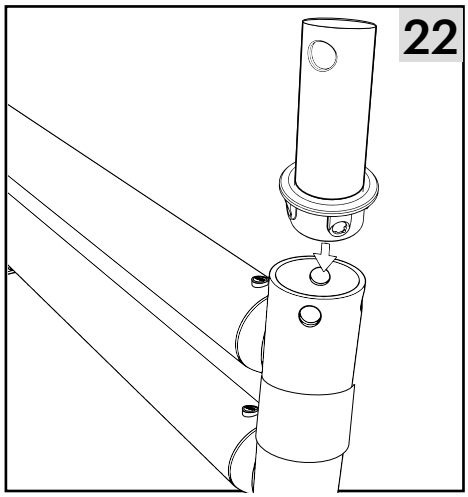
22

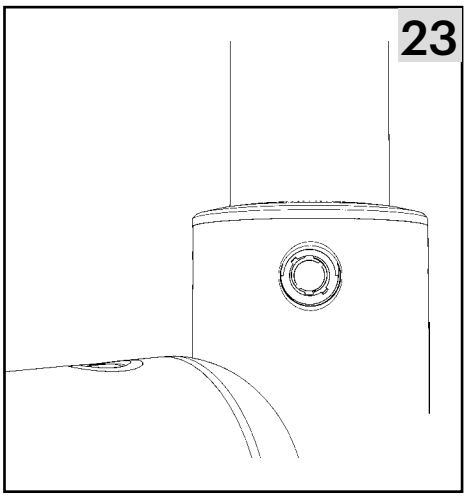
23

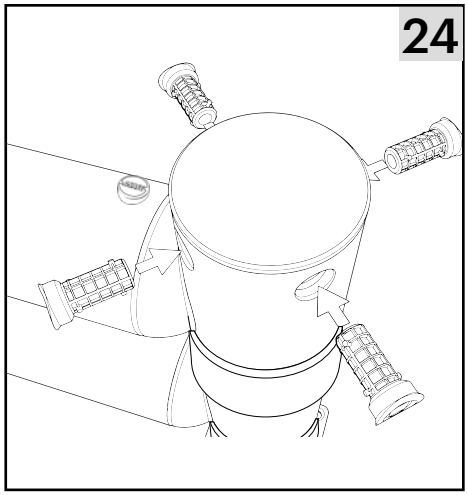
24

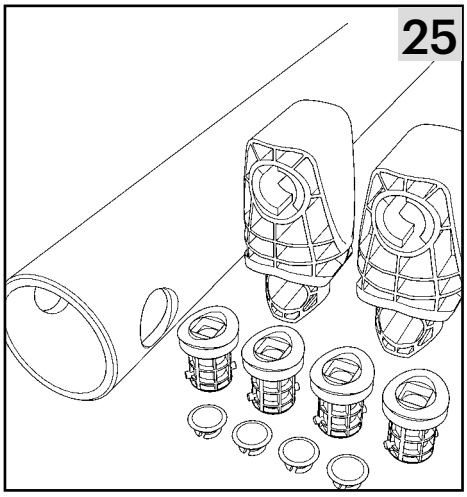
25

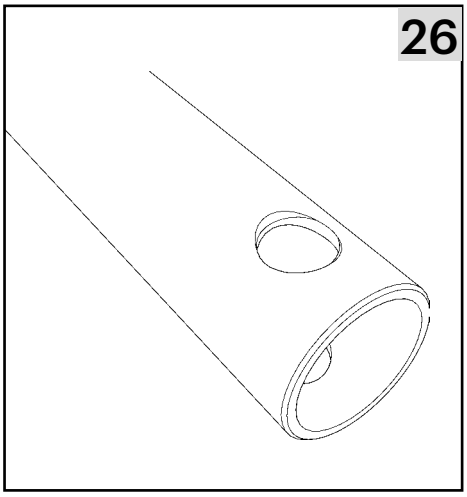
26

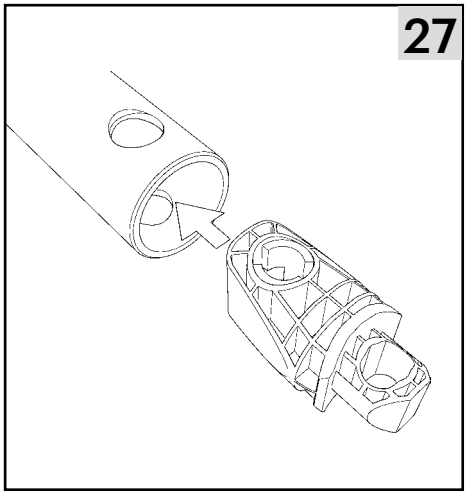
27

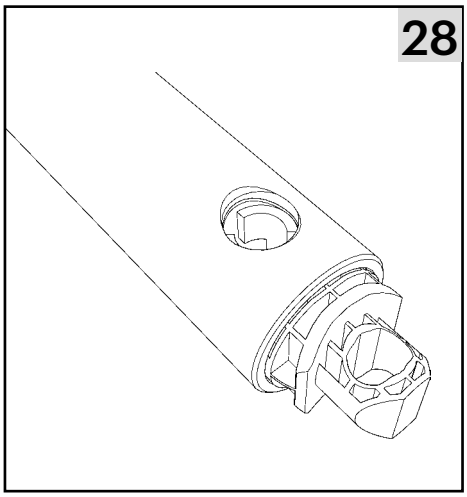
28

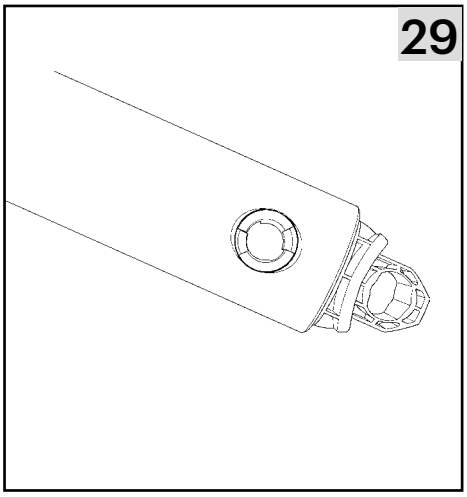
29

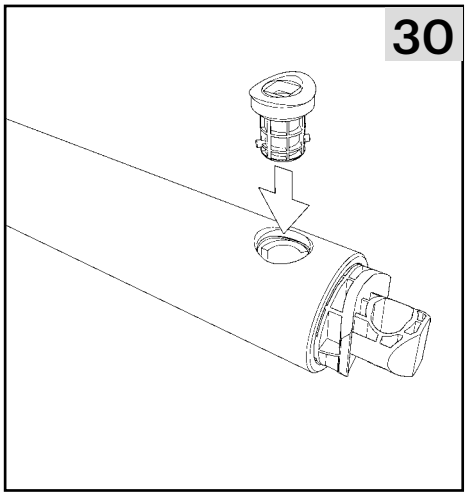
30

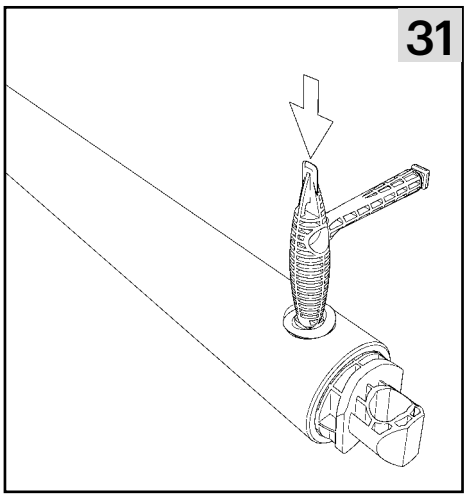
31

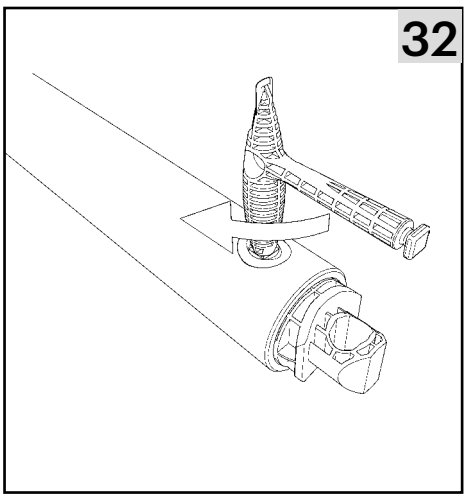
32

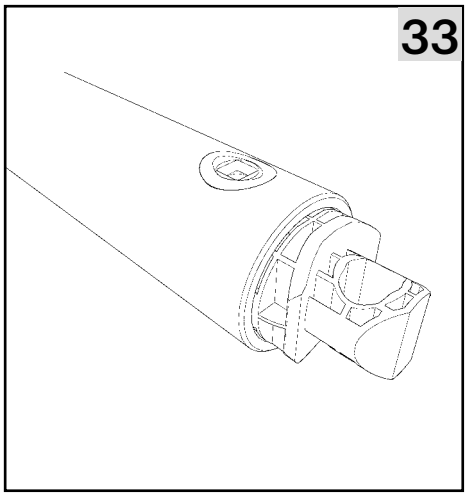
33

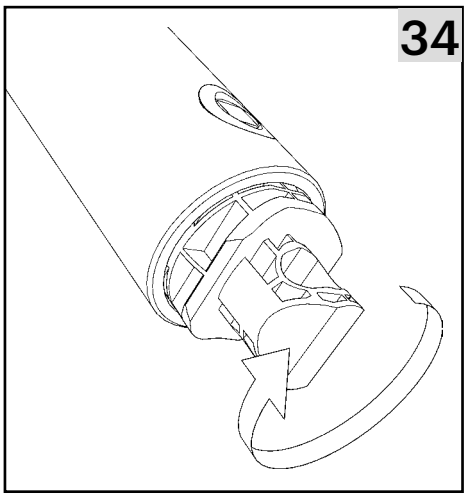
34

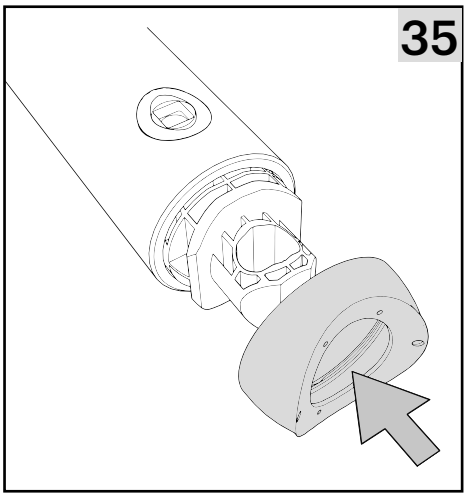
35

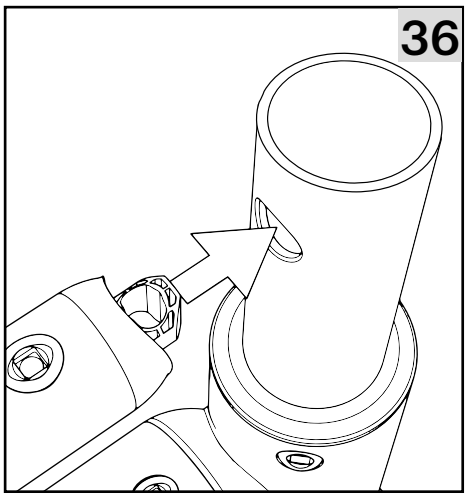
36

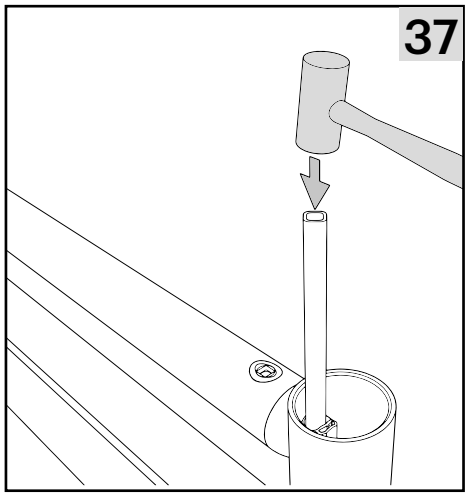
37

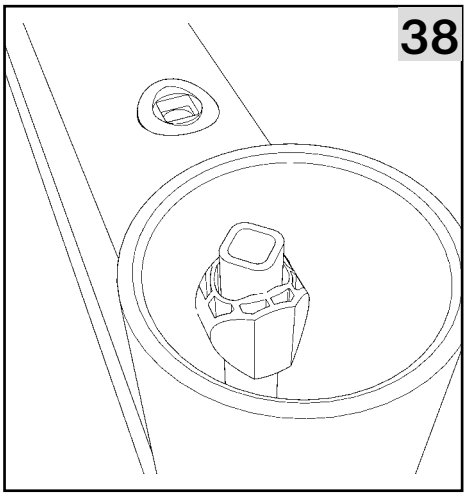
38

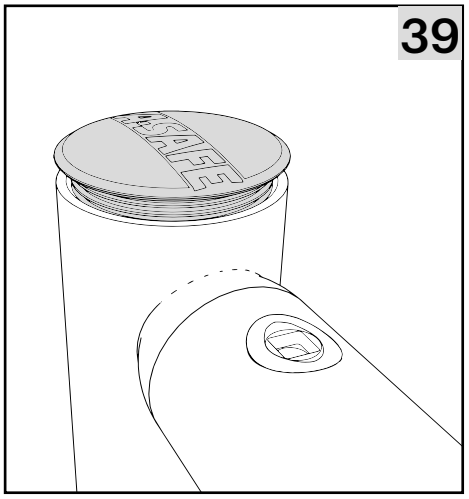
39

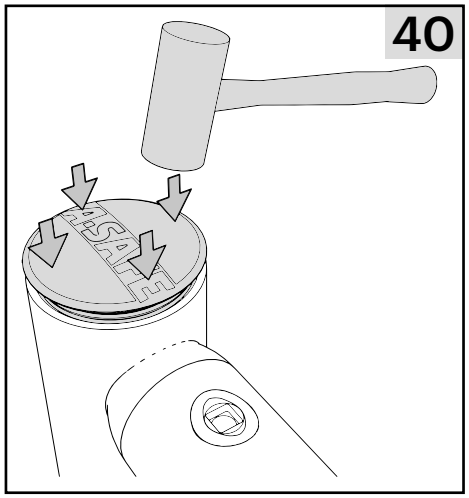
40

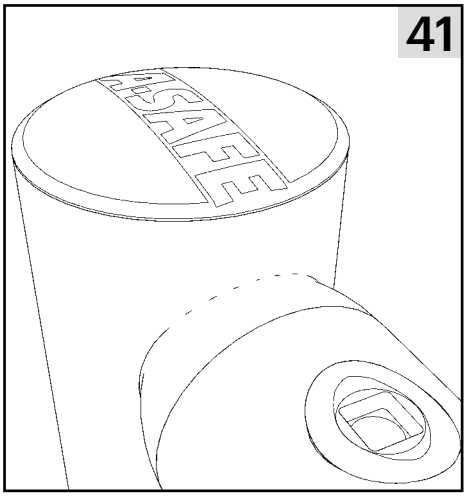
41

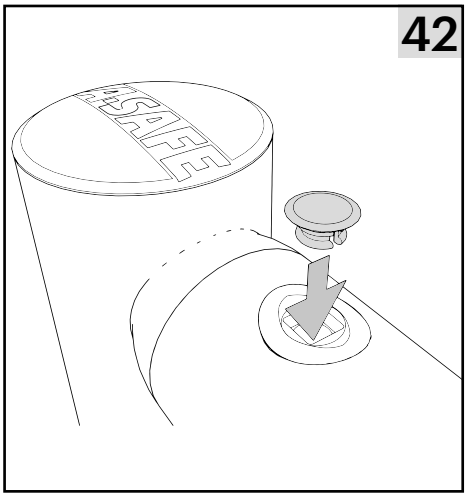
42

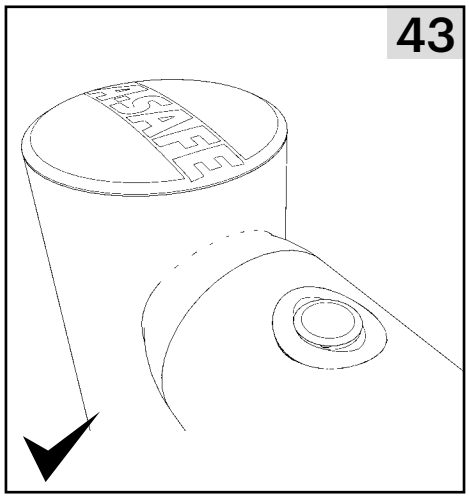
43

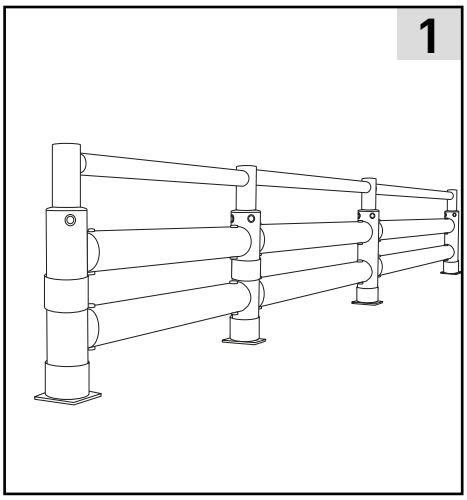
1

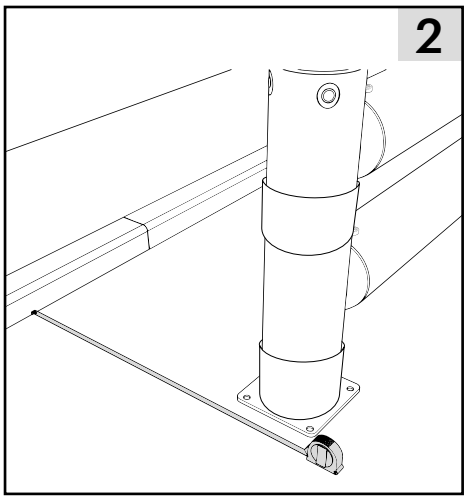
2

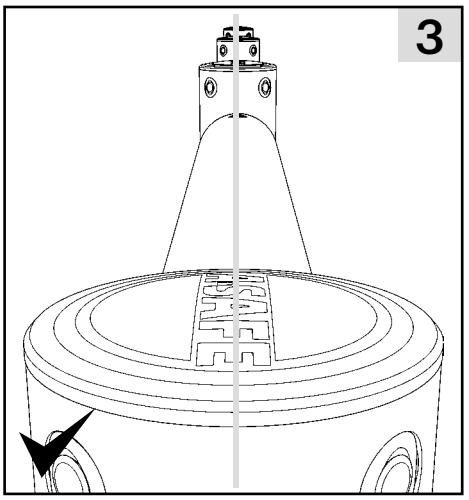
3

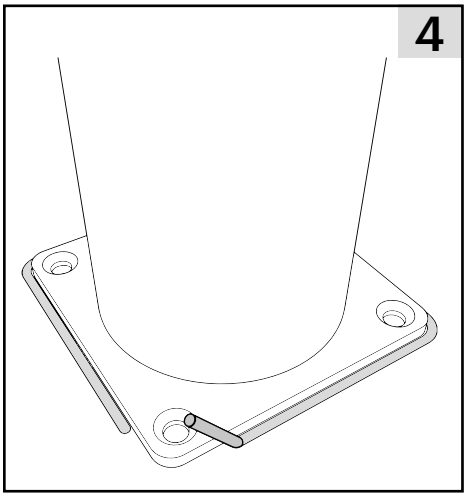
4

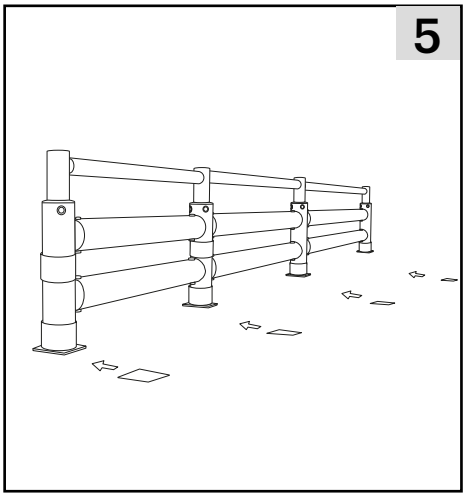
5

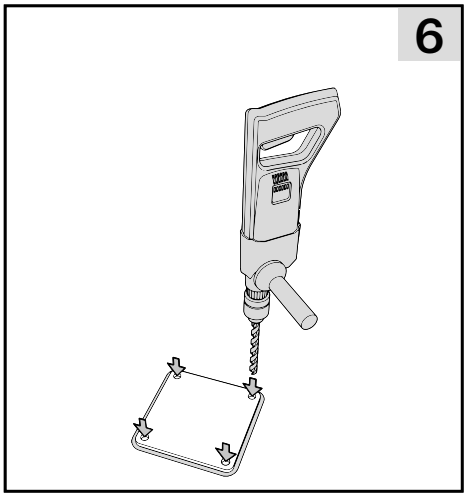
6

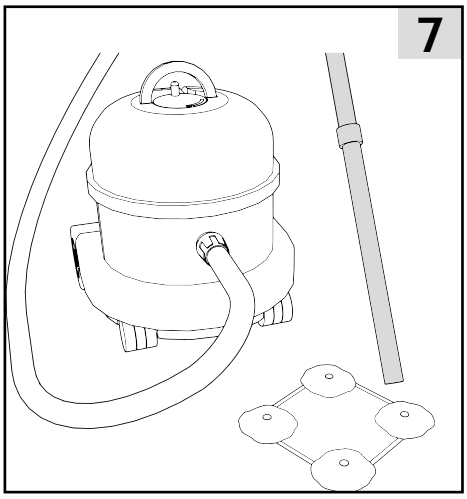
7

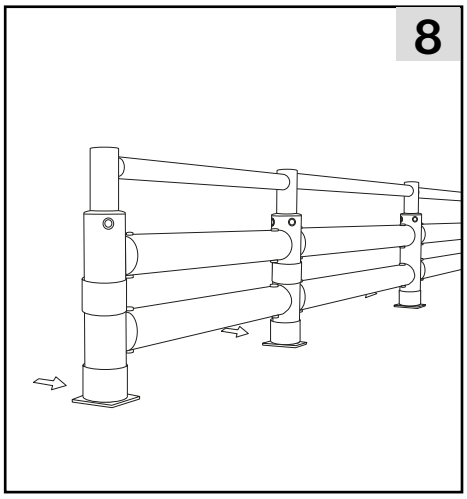
8

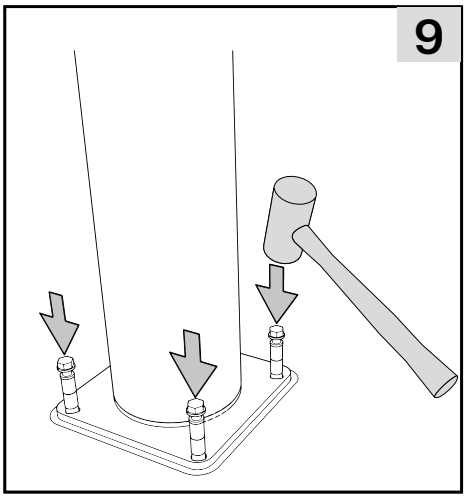
9

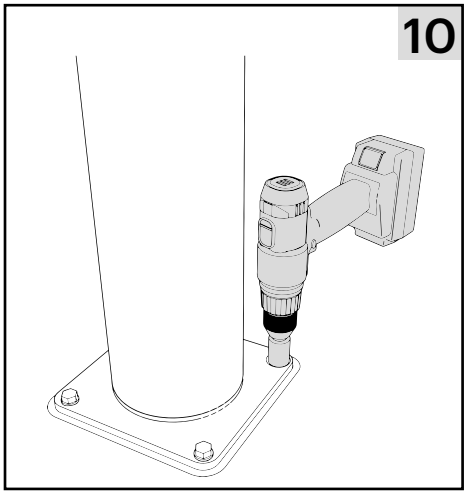
10

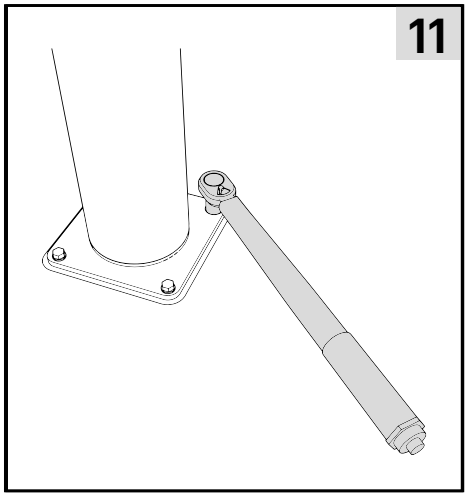
11

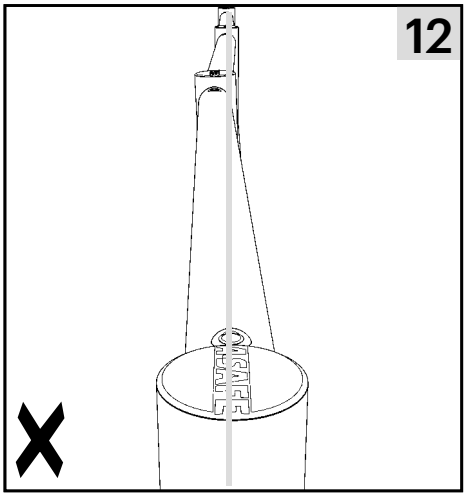
12