Slider Plates

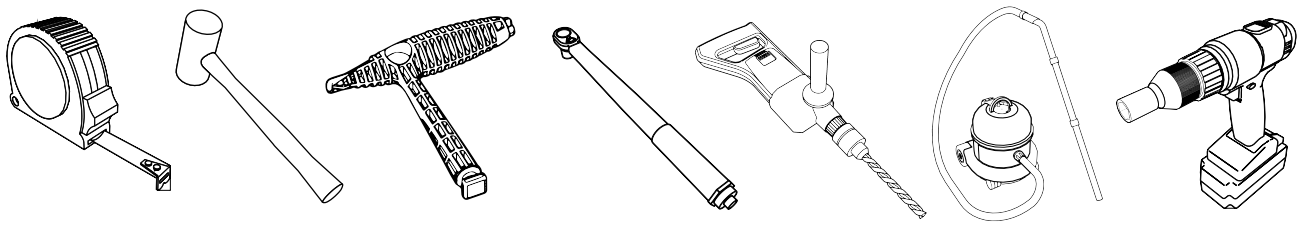

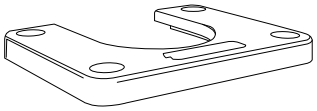

1X

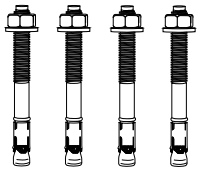

4X

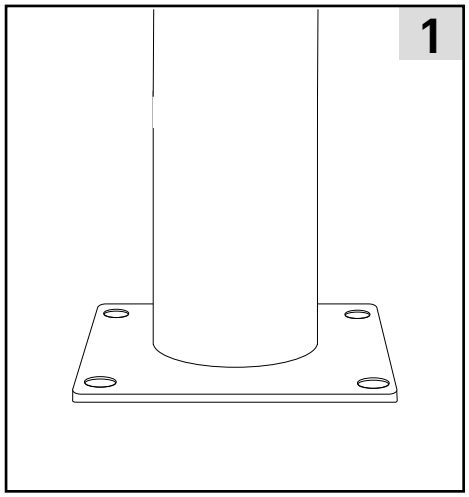
1

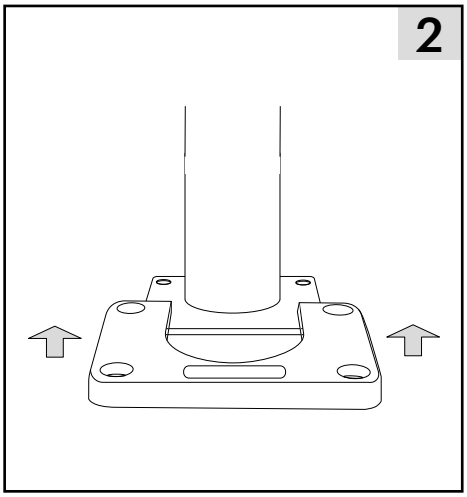
2

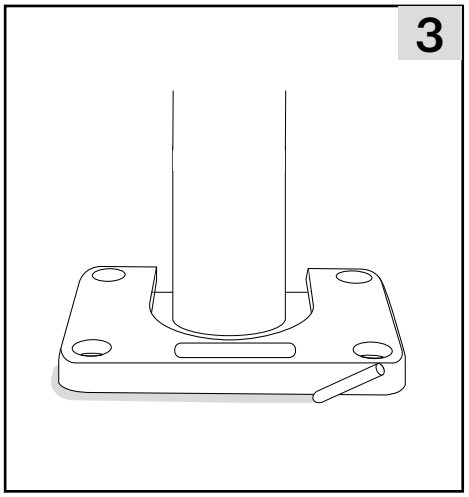
3

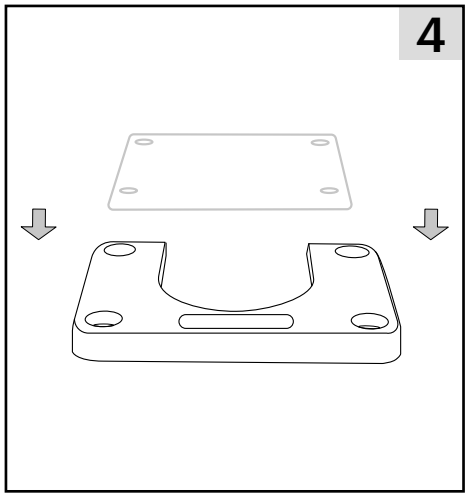
4

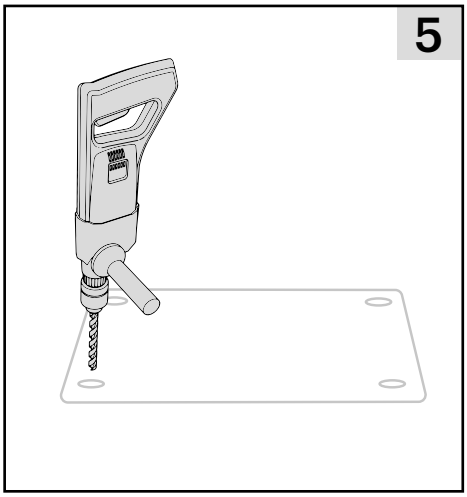
5

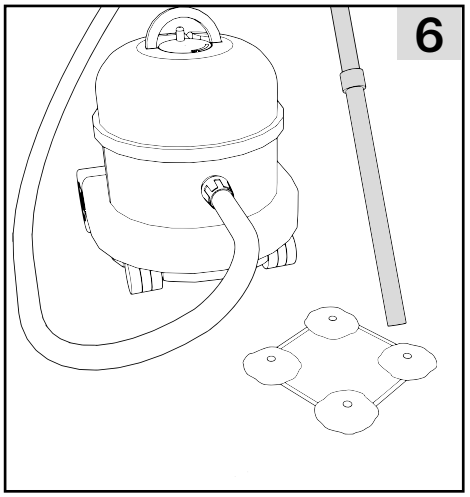
6

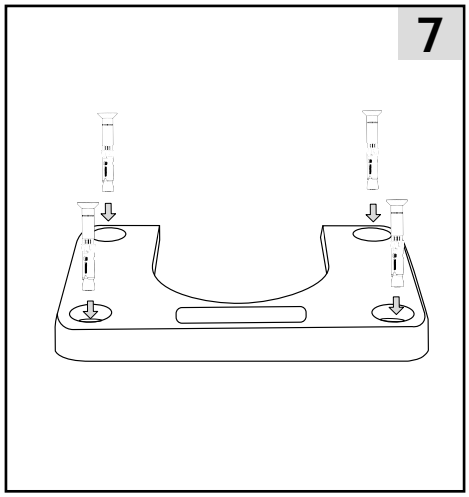
7

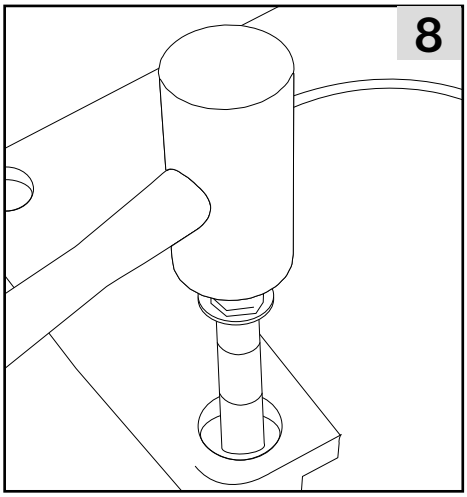
8

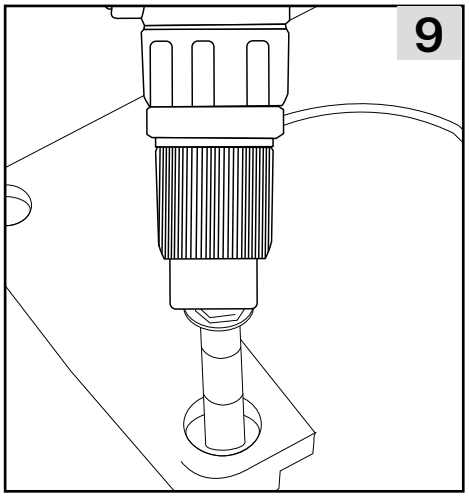
9

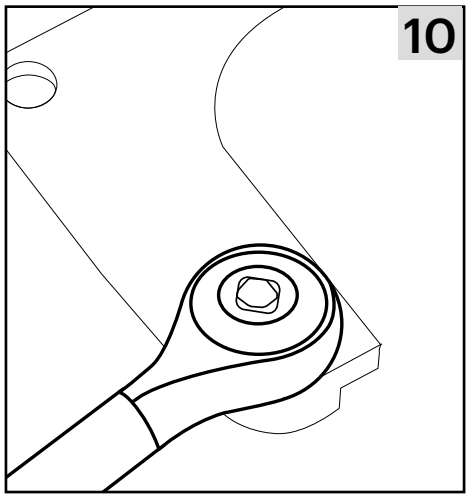
10